BOX FOR EMINENCE ALPHA10 6/30/10
(REV AS BUILT 3/14/11) 49 LB W/ BRACING)

CROSS-BRACE INTERNALLY WITH (REAL WOOD) 1X2 EACH SHORT WAY (ASYMM)
(PRECISE (SNUG WITHIN 1/32) BRACE FROM REAR PANEL TO
WOOFER MAGNET A BONUS)

STUFFING/LINING ALTERNATIVES:

(1) STUFF TOP 1/2 TO 2/3 POLYESTER FIBERFILL AT 0.35 LB/FT3)
(1.5 LB TOTAL PILLOW STUFFING IN TOP 1/2-TO-2/3 OF BOX,
FEATHER FROM DENSE TO)1ZERO AWAY FROM DRIVER,
USE BRACES, EYELETS, MESH, AND/OR CORD AGAINST SETTLING)

(2) LINE (AT LEAST) TOP, BACK, AND ONE SIDE WITH BAT OF FIBERGLASS
CUT TO SIZE. MORE TO TASTE
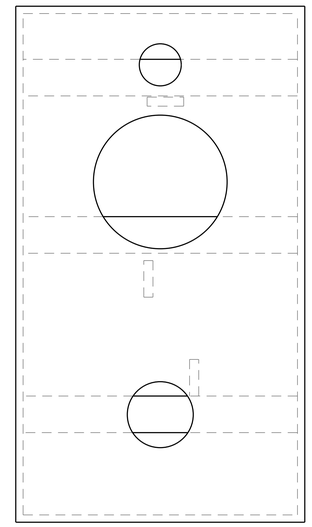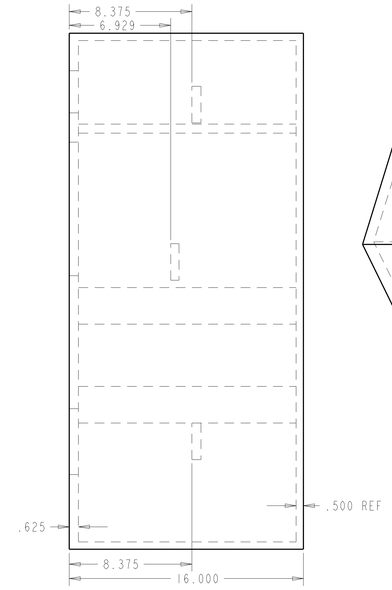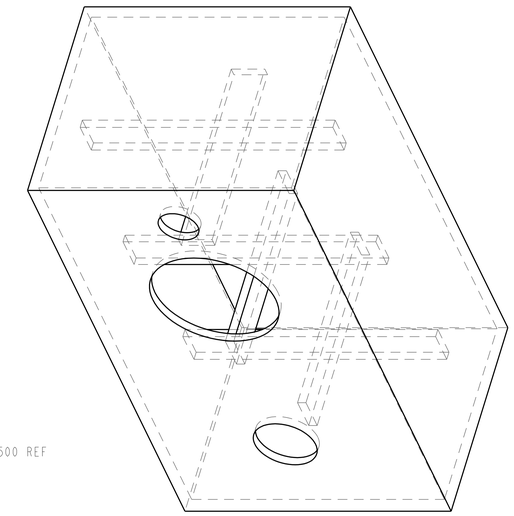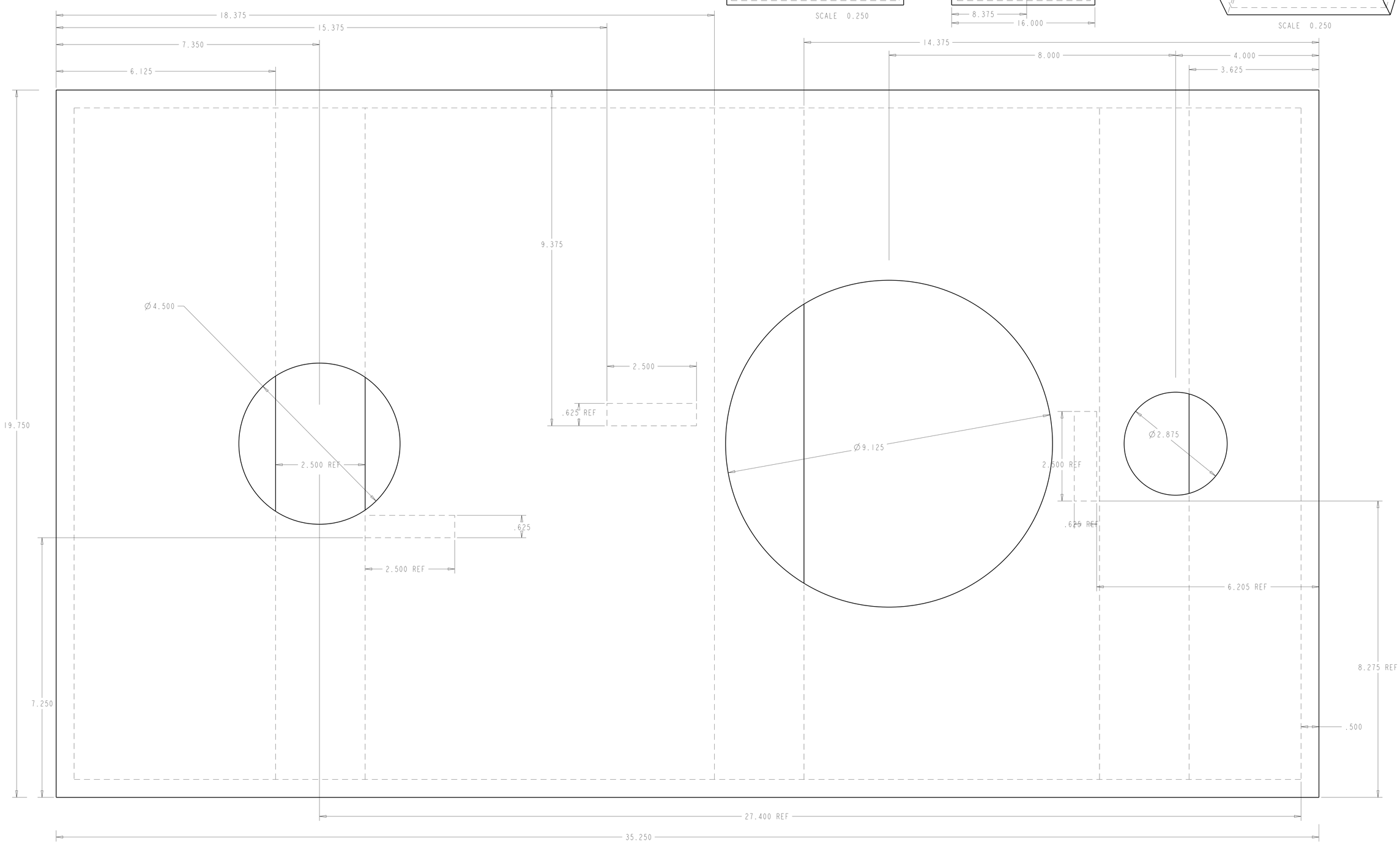
STOCK SHOWN 1/2 (EST WT PARTICLE BOARD (@0.029 LB/IN3) 45 LB)
SHOULD BE BRACED EVERY 12" WITH 1X2 HARDWOOD.
5/8 STOCK MAY BE USED (54 LB) WITH BRACING AS SHOWN
(RECOMM BALTIC BIRCH OR MARINE PLY, ETC)